Relay Board

The load starts working when high level inputs

The load stops working when high level inputs

JP1 is used to connect VCC of the signal terminals and V+ of the relay.
JP2 is used to connect GND of the signal terminals and V+ of the relay.

The high-level signal that over 1.3V to IN can trigger the relay.

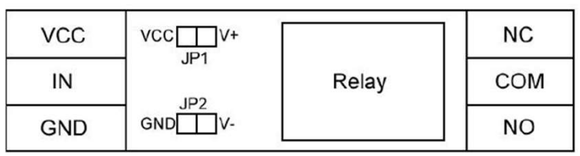

Parameters

Working Voltage	DC 3-3.3V
Working Current(VCC)	65mA
Trigger Current(IN)	3mA
Main Components	EL817, SRD-DC03V-SL-C
Flyback Diode Protection	Yes
Channel	1 channel
Compatible Load	10A 250VAC / 10A 30VDC
Response Time	<20ms
Size	70mm*17mm*20mm(LWH)

Channel Name:	Device Type:	D#:	I/O Type:	Chn #:	Timing:	Offset:	Conversion:	H
PT103	LabJackUD	0	A to D	0	1.00	0.00	None	
PT104	LabJackUD	0	A to D	1	1.00	0.00	None	
FCV100VentValve	LabJackUD	0	Dig In	6	1.00	0.00	None	
FCV101RoughValve	LabJackUD	0	Dig In	7	1.00	0.00	None	
FY100CR1	LabJackUD	0	Dig Out	4	0.00	0.00	None	
FY101CR2	LabJackUD	0	Dig Out	5	0.00	0.00	None	

Convection Gauge

9-pin D-sub Connector pinout

PIN NUMBER	PIN DESCRIPTION
1	Relay 1 Normally Open
2	Relay 1 Normally Closed
3	Power Input (12-28 Vdc)
4	Power Ground
5	Analog Output 1 (Log-Linear 1-8V, or Non-linear Granville-Phillips® Mini-Convectron ®compatible)
6	Relay 1 Common
7	Relay Disable (Disables both Relays when connected to pin 4 - Ground)
8	Analog Ground
9	Analog Output 2 (Programmable Linear 0-10 V)

Piezo Gauge

The analog output voltage is available on pin 5 and referenced to analog common on pin 8. The voltage output may be set to 1, 5 or 10 volts full scale. The standard value is 10 volts and will have been set as such unless another value was specified at time of order. The analog full-scale settings can be changed in the field with digital commands.

NOTICE: The load resistance must be no less than 2 kΩ for voltage output to maintain accurate readings.

Optional to the standard voltage output is the 0-20 mA or 4-20 mA current output that is proportional to pressure. The current loop output is useful for remote applications where pickup noise could substantially affect the stability of the voltage output. The current loop signal replaces the voltage output on pin 5 of the D" connector and is returned on pin 8.

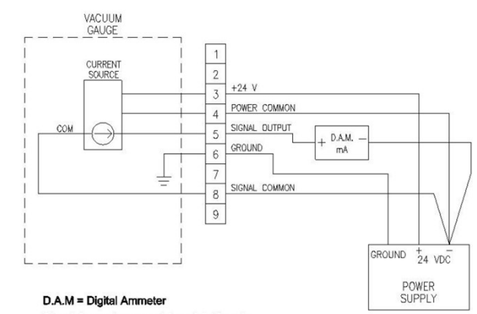

D.A.M = Digital Ammeter
Signal Output is sourced from 24V Supply

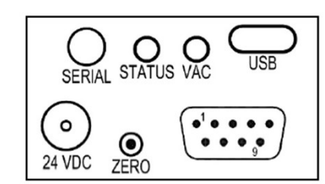

NORMANDALE COMMUNITY COLLEGE	DESCRIPTION: ARVET Electrical Elementary Diagram			
DRAWN: JOHN LASSWELL	SIZE	FSCM NO	DWG NO: SKE-S#-001	REV
ISSUED	SCALE: 1 : 1		SHEET: 1 OF 27	

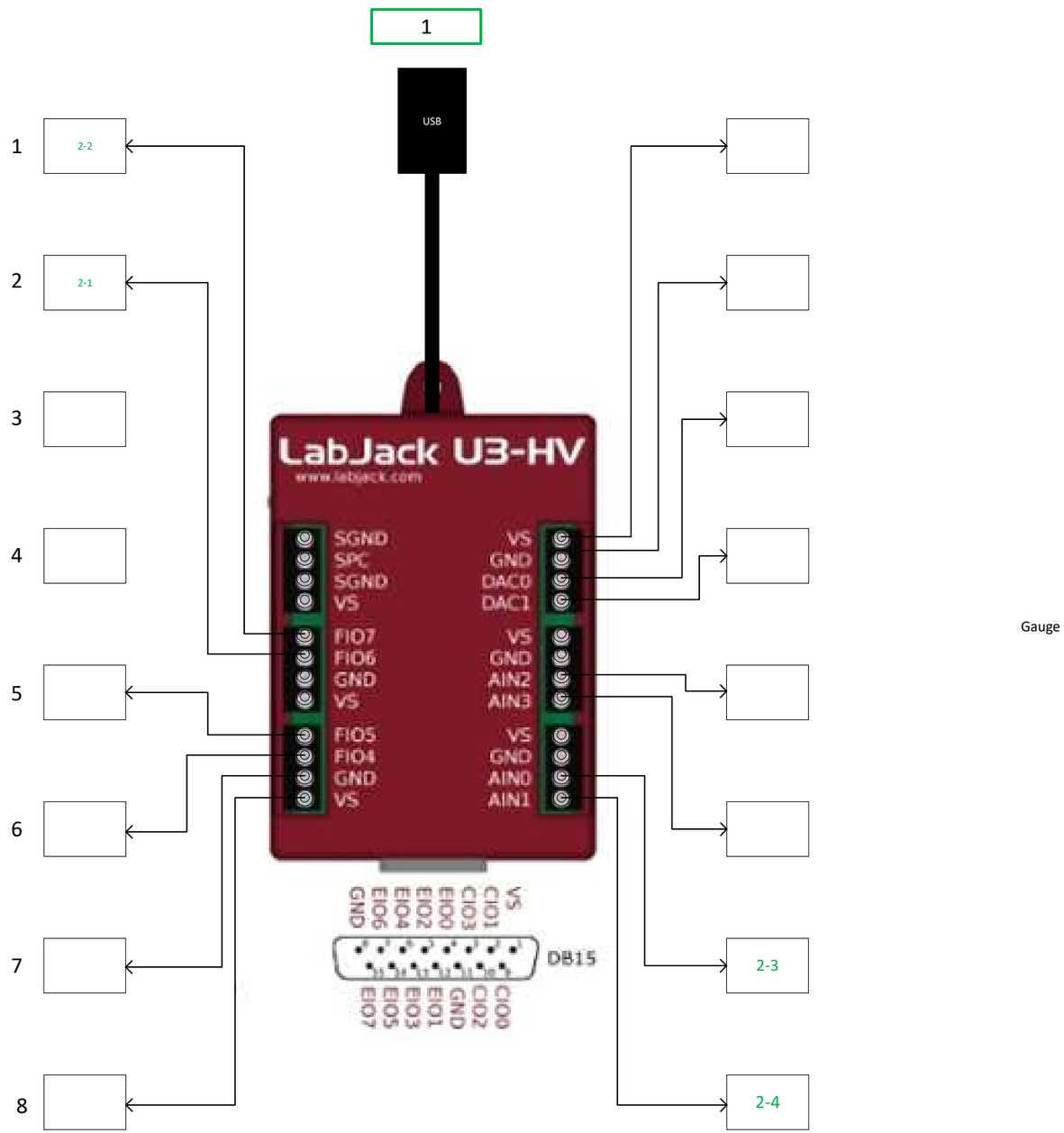

Gauge

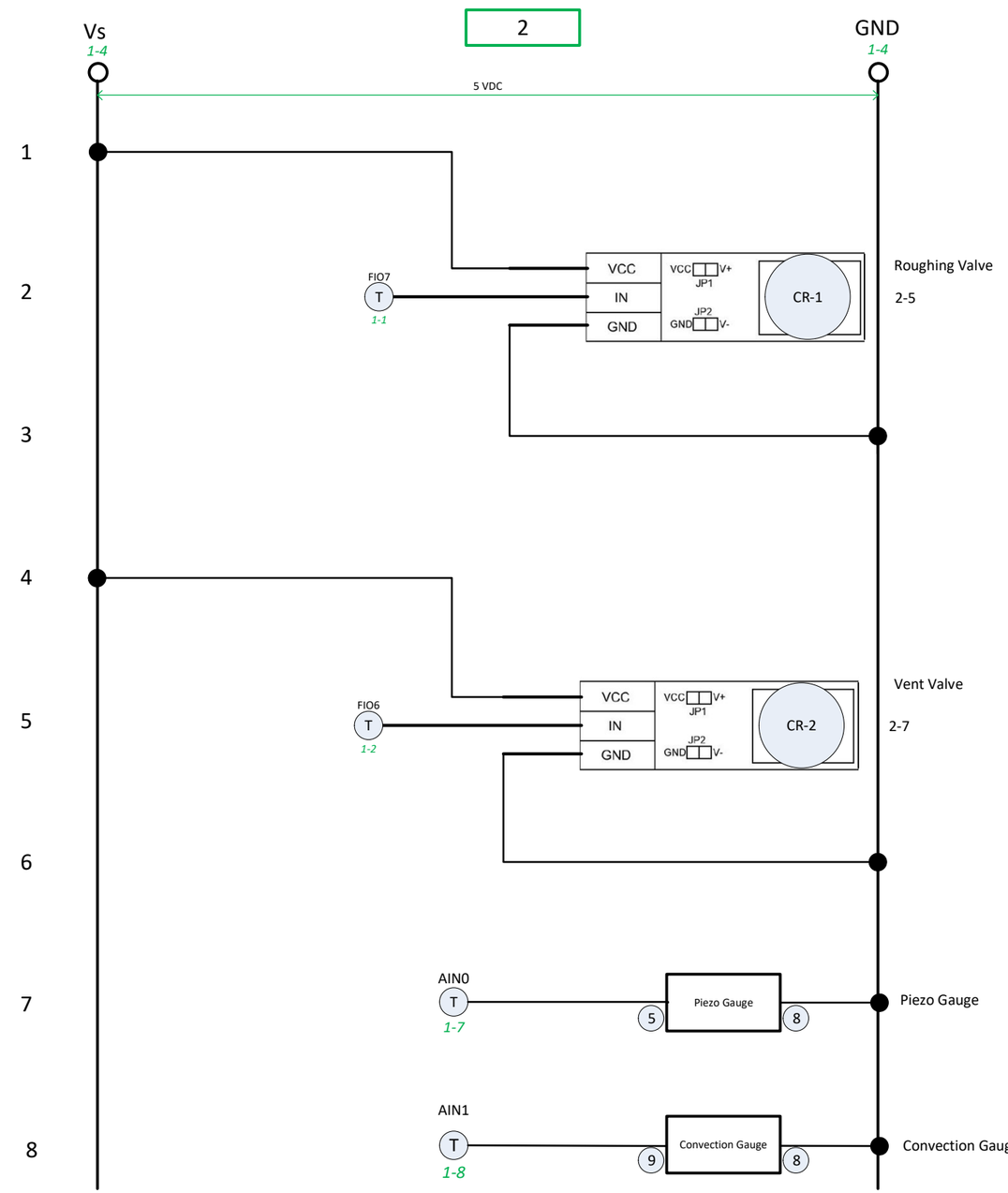

NORMANDALE COMMUNITY COLLEGE	DESCRIPTION: ARVET Electrical Elementary Diagram		
DRAWN: JOHN LASSWELL	SIZE	FSCM NO	DWG NO: SKE-S#-002	REV
ISSUED	SCALE: 1 : 1		SHEET: 2 OF 27

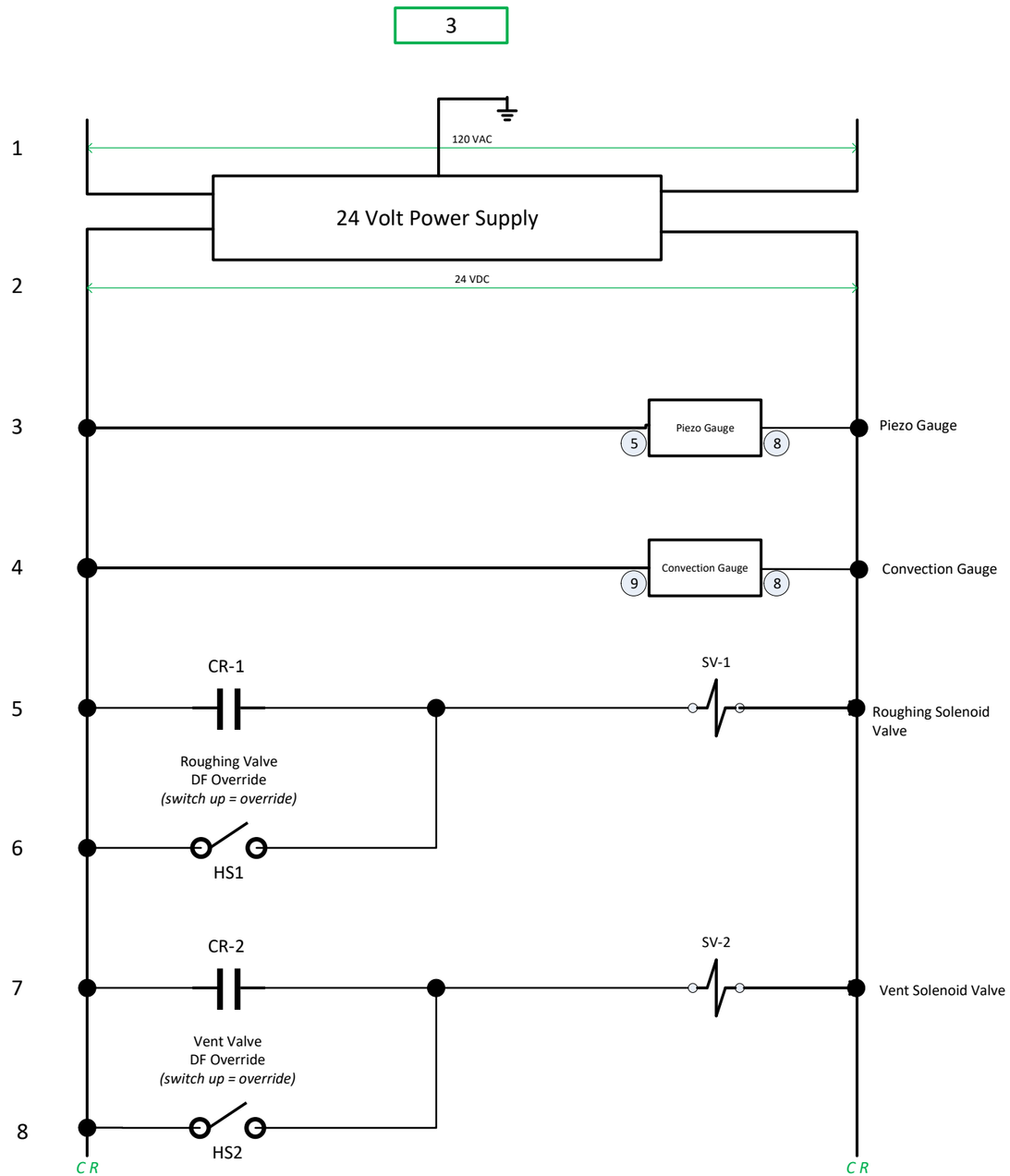

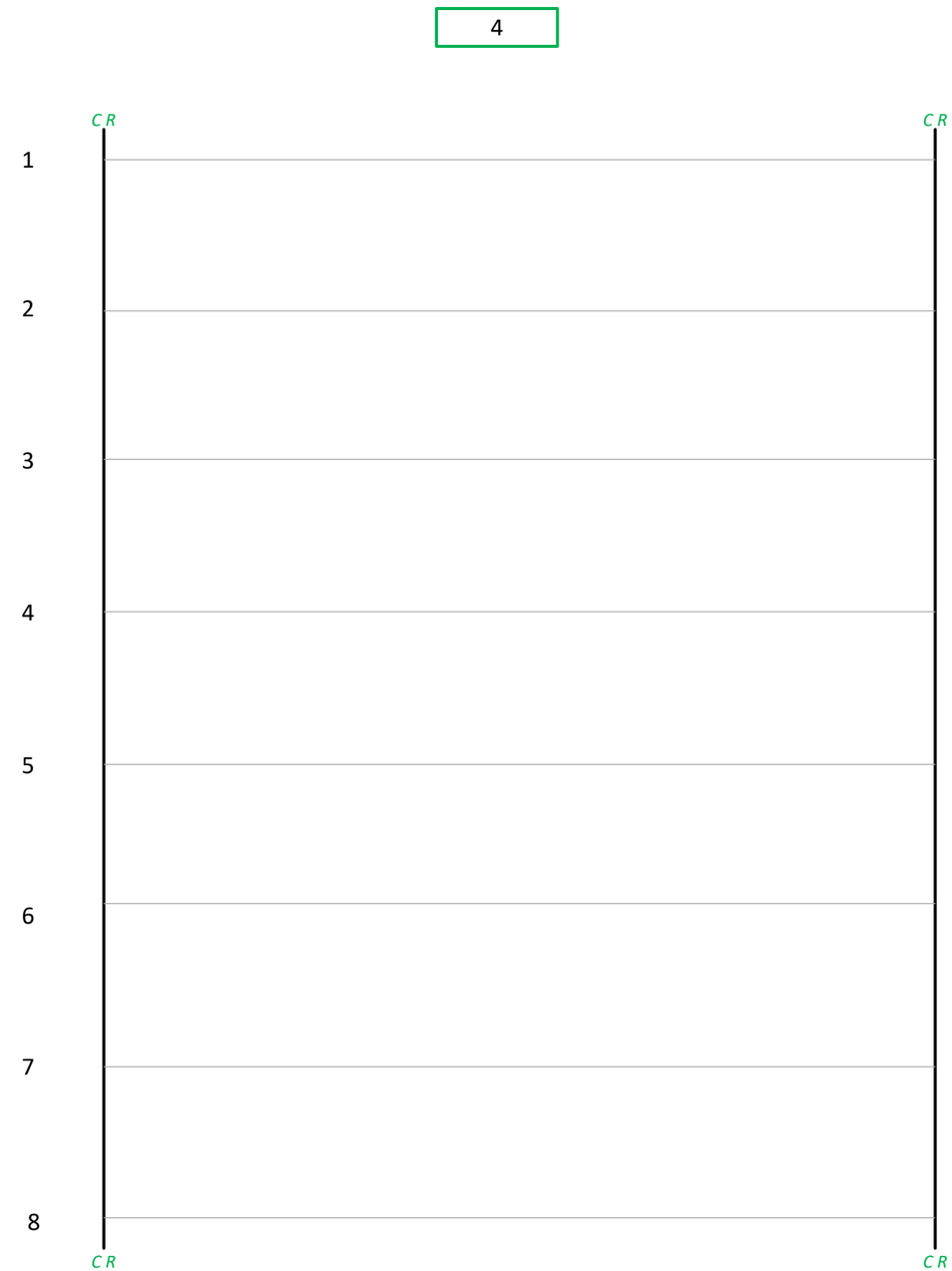

NORMANDALE COMMUNITY COLLEGE	DESCRIPTION: ARVET Electrical Elementary Diagram		
DRAWN: JOHN LASSWELL	SIZE	FSCM NO	DWG NO: SKE-S#-00	REV
ISSUED	SCALE: 1 : 1		SHEET: 3 OF 27